Key Industrial

997 Enterprise Way Napa, CA 94558 • Phone: 800-852-5270 • Fax: 707-252-9054

Key Advantage Butterfly Valve

- ***Materials and design meet 3A sanitary standards***
- ***Cost effective model***
- ***Compact construction***
- ***Spring loaded handle locks valve open or close***
- ***Reversible hub***

Questions?
Toll Free 1-800-852-5270

Specifications

Size:
1”, 1.5”, 2”, 2.5”, 3”, 4”

Seat:
EPDM (Standard)
*Ask about other options

Connection:
Sanitary Clamp (Standard)
* Other options available upon request

Material:
AISI 304 Stainless Steel

Temperature Range:
+15 Degrees Fahrenheit to +200 Degrees Fahrenheit

Working Pressure:
147 PSI Maximum (10 Bars)
Tested at 176 PSI (16 Bars)

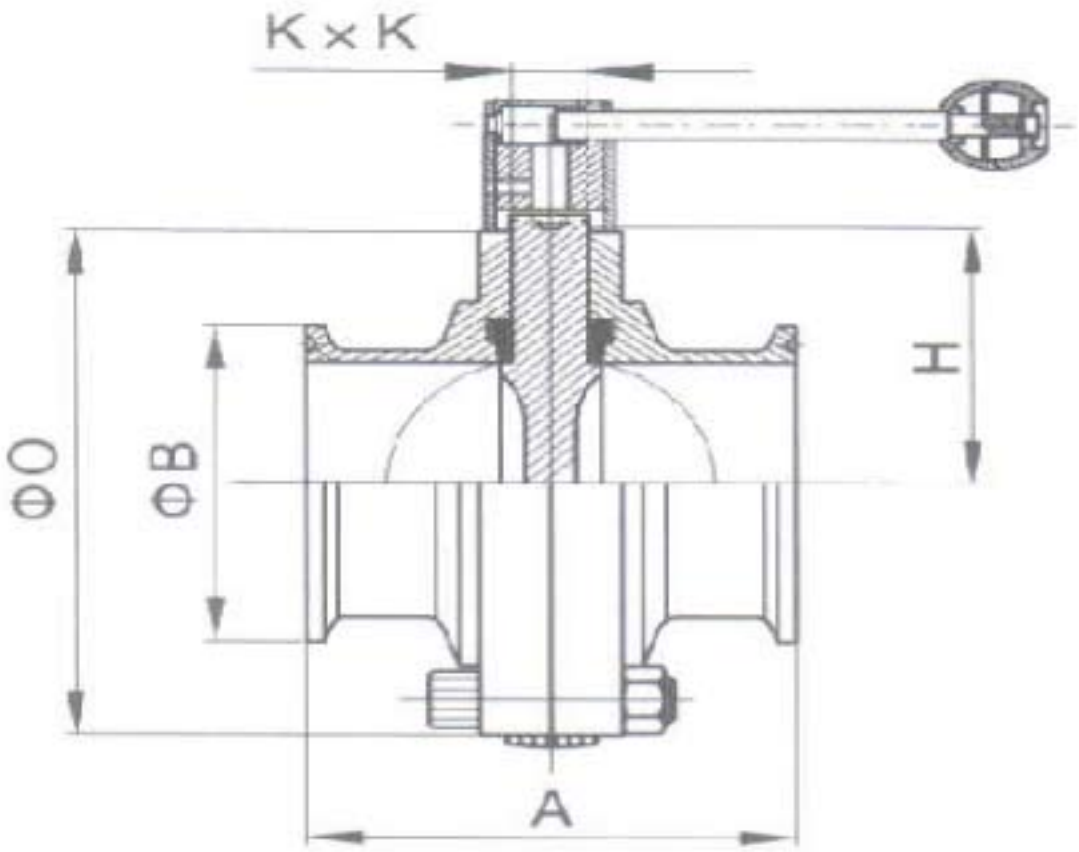

	L(mm)	Φ1(mm)	Φ2(mm)	ΦD(mm)
DN 25	100	50.5	43.5	22.1
DN 38	125	50.5	43.5	34.8
DN 51	150	64	56.5	47.5
DN 76	220	91	83.5	72.9